ASSEMBLY DRAWING LIST

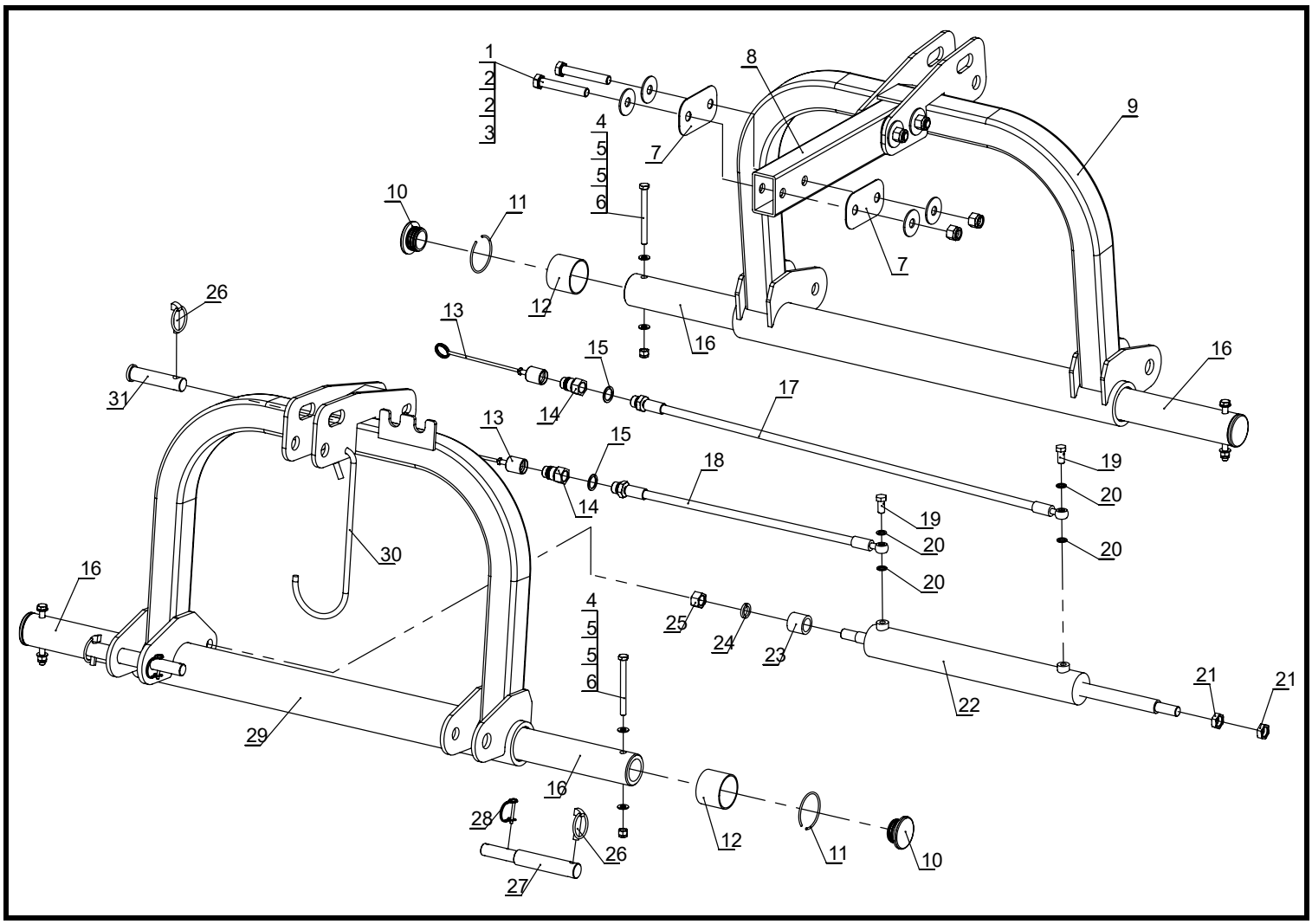

KDX three-point linkage				
Ser.No	**Code**	**Name & Specification**	**Quantity**	**Remarks**
1	B000040	Bolt M16×100	4	KDX
2	W000012	Big washer 16	8	KDX
3	N000033	Lock nut M16	4	KDL, KDS, KDX, KDXP, KM, KMHP
4	N000030	Lock nut M10	4	KDL, KDS, KMHP, KDX, KDXP, KS
5	W000014	Washer 10	8	KDL, KDS, KMHP, KDX, KDXP, KS
6	B000023	Bolt M10×80	4	KDX180-200
	B000016	Bolt M10×110	4	KDX220-240, KDXP180-240
7	400008	Suspension plate	4	KDX
8	400009	Connecting square tube	1	KDX
9	400010	Front riser Linkage	1	KDX180-200
	400011	Front riser Linkage	1	KDX220-240
10	400012	Round pipe plug	4	KDX220-240

KDX three-point linkage				
Ser.No	**Code**	**Name & Specification**	**Quantity**	**Remarks**
11	S000015	Circlip for hole 45	4	KDX180-200, KMH, KMHP
	S000016	Circlip for hole 65	4	KDX220-240, KDXP180-240
12	200023	Self-lubricating bearing 40×44×50	4	KDX180-200, KDL, KMH, KMHP
	400016	Self-lubricating bearing 60×65×50	4	KDX220-240, KDXP180-240
13	200004	Quick change connector cover	2	KDL, KDS, KDX, KDXP, KMH, KMHP
14	200005	Hose Quick connector G1/2	2	KDL, KDS, KDX, KDXP, KMH, KMHP
15	200006	Combination washer G1/2	2	KDL, KDS, KDX, KDXP, KMH, KMHP
16	400020	Slide pipe	2	KDX180-200
	400021	Slide pipe	2	KDX220-240, KDXP180-240
17	200010	Hose 1900mm	1	KMH, KMHP, KDX, KDXP
18	200007	Hose 1500mm	1	KMH, KMHP, KDX, KDXP
19	200008	Hollow bolt	2	KDL, KDS, KDX, KDXP, KMH, KMHP
20	200009	Combination washer 12	4	KDL, KDS, KDX, KDXP, KMH, KMHP
21	N000018	Thin nut M18×1.5	2	KMH, KMHP, KDX, KDXP
22	200014	Cylinder	1	KDX180-200, KMH, KMHP
	400028	Cylinder	1	KDX220-240, KDXP180-240
23	200013	Cylinder sleeve	1	KMH, KMHP, KDX, KDXP
24	W000005	Spring washer 18	1	KMH, KMHP, KDX, KDXP
25	N000012	Nut M18×1.5	1	KMH, KMHP, KDX, KDXP
26	100003	Lock pin	3	KDL, KDX, KDXP, KM, KMHP
27	400033	Lower pin	2	KDX
28	400034	Lock pin 4.5	2	KDX, KDXP
29	400035	Rear riser Linkage	1	KDX180-200
	400036	Rear riser Linkage	1	KDX220-240
30	100002	Hook	1	KDL, KDS, KDX, KDXP, KM, KMHP
31	400038	Upper linkage pin	1	KDL, KDX, KDXP

ASSEMBLY DRAWING LIST

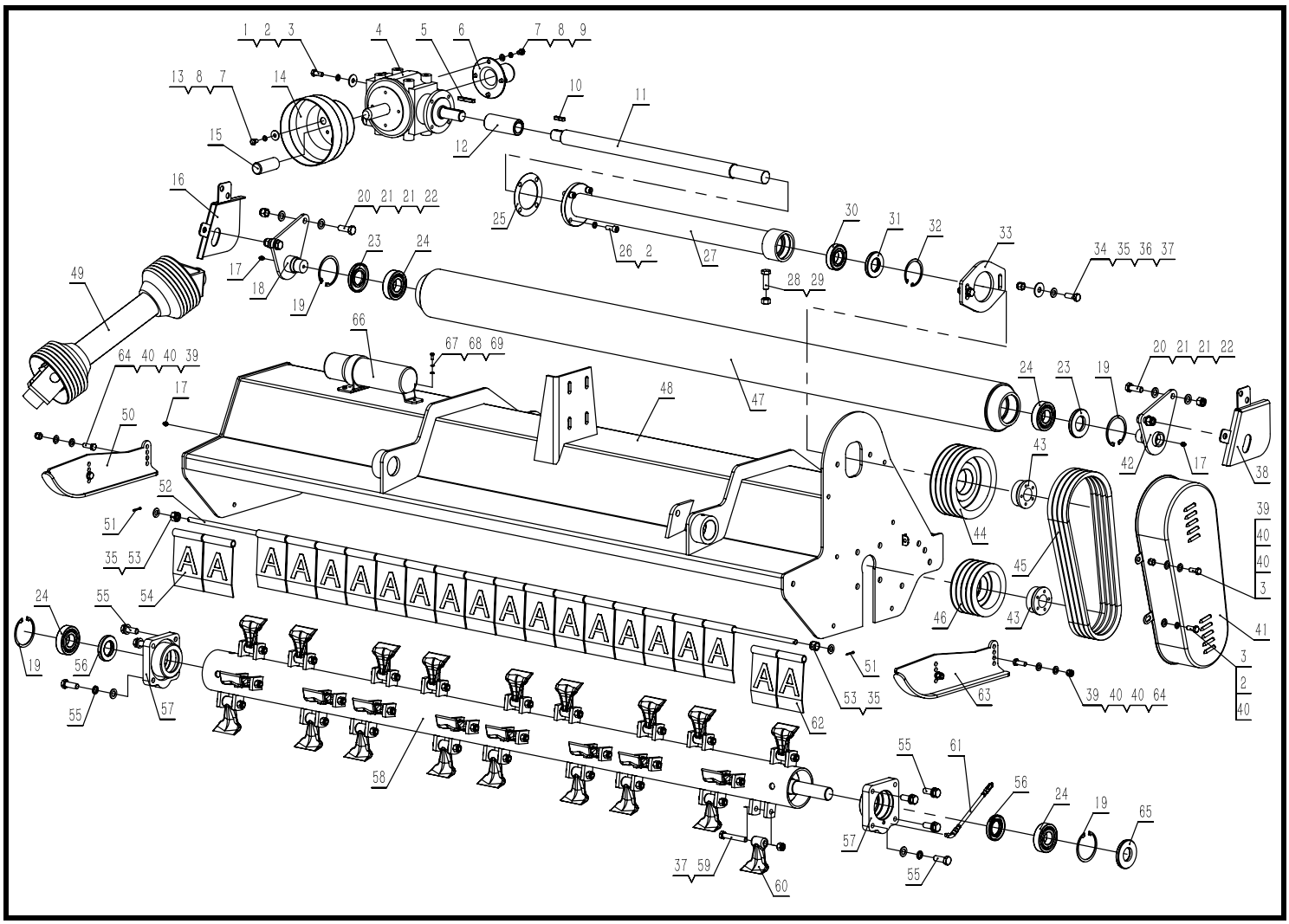

KDX series				
Ser.No	**Code**	**Name & Specification**	**Quantity**	**Remarks**
1	W000010	Big washer 12	4	KDL, KDS, KM, KMHP, KDX, KDXP
2	W000002	Spring washer 12	10	KDL, KDS, KM, KMHP, KDX, KDXP
3	B000084	Bolt M12×30	8	KDL, KDS, KM, KMHP, KDX, KDXP
4	400042	Gearbox	1	KMHP, KDX, KDXP
5	K000009	Key A10×65	1	KM, KMHP, KDX, KDXP
6	400044	Shaft protection	1	KMHP, KDX, KDXP
7	B000073	Bolt M10×16	8	KDL, KDS, KM, KMHP, KDX, KDXP
8	W000001	Spring washer 10	8	KDL, KDS, KM, KMHP, KDX, KDXP, KS
9	W000014	Washer 10	4	KDL, KDS, KMHP, KDX, KDXP, KS
10	K000001	Key A10×40	1	KM, KMHP, KDX, KDXP
11	400049	Drive shaft for 180/220	1	KDX180-220, KDXP180-220
	400050	Drive shaft for 240	1	KDX240, KDXP240

KDX series				
Ser.No	**Code**	**Name & Specification**	**Quantity**	**Remarks**
12	100060	Drive shaft tube	1	KM, KMHP, KDX, KDXP
13	W000009	Big washer 10	4	KDL, KDS, KM, KMHP, KDX, KDXP, KS
14	000024	PTO protection	1	KDL, KDS, KM, KMHP, KDX, KDXP
15	000030	Gear box shaft cover	1	KDL, KDS, KM, KMHP, KDX, KDXP, KS
16	400055	Right roller protect	1	KDL, KDX
17	600078	Grease Nipples M10	3	KDL, KDX, KDXP, KMHP
18	500043	Hanging plate (Right)	1	KDL, KDX, KDXP
19	S000010	Circlip for hole 90	4	KDL, KDX, KDXP
20	B000103	Bolt M16×45	4	KDL, KDX, KDXP
21	W000017	Washer 16	8	KDL, KDX, KDXP
22	N000033	Lock nut M16	4	KDL, KDX, KDXP, KM, KMHP
23	OS000008	Oil seal	2	KDL, KDX, KDXP
24	400063	Bearing	4	KDL, KDX, KDXP
25	100030	Paper washer	1	KM, KMHP, KDX, KDXP
26	B000146	Hex cylinder head screw M12×35	4	KM, KMHP, KDX, KDXP
27	400066	Drive shaft tube for 200/220	1	KDX180-220, KDXP180-220
	400067	Drive shaft tube for 240	1	KDX240, KDXP240
28	B000130	Bolt M16×1.5×50	1	KM, KDX
29	N000011	Ordinary nut M16×1.5	1	KM, KDX
30	400070	Bearing	1	KDX, KDXP
31	OS000011	Oil seal	1	KDX, KDXP
32	S000009	Circlip for hole 80	1	KDX, KDXP
33	400073	Drive shaft support plate	1	KDX
34	B000097	Bolt M14×40	2	KM, KDX, KDXP
35	W000016	Washer 14	4	KDL, KM, KDX, KDXP
36	W000011	Big washer 14	2	KM, KDX
37	N000032	Lock nut M14	N	KDL, KM, KDX, KDXP, KS
38	400078	Left roller protect	1	KDL, KDX
39	N000031	Lock nut M12	6	KDL, KDS, KM, KMHP, KDX, KDXP, KS
40	W000015	Washer 12	14	KDL, KDS, KM, KMHP, KDX, KDXP, KS
41	400081	Belt cover	1	KDX
42	400082	Hanging plate (Left)	1	KDL, KDX, KDXP
43	400083	Tension 40×80	2	KDL, KDX, KDXP
44	400084	Big pulley	1	KDX, KDXP
45	400085	Belt	4	KDX
46	400086	Small pulley	1	KDX, KDXP
47	500054	Back roller for 180	1	KDL, KDX, KDXP
	400087	Back roller for 200	1	KDL, KDX, KDXP
	400088	Back roller for 220	1	KDL, KDX, KDXP
	400089	Back roller for 240	1	KDX, KDXP

KDX series				
Ser.No	**Code**	**Name & Specification**	**Quantity**	**Remarks**
48	418000	Main body for 180	1	KDX
	400090	Main body for 200	1	KDX
	400091	Main body for 220	1	KDX
	400092	Main body for 240	1	KDX
49	400093	PTO Shaft 05B1000	1	KDX, KDXP
50	400094	Adjust plate (right)	1	KDL, KDX, KDXP
51	P000005	Cotter pin Ø4×25	2	KDL, KDS, KM, KMHP, KDX, KDXP, KS
52	500110	Baffle shaft for 180	1	KDL, KDX, KDXP
	400096	Baffle shaft for 200	1	KDL, KDX, KDXP
	400097	Baffle shaft for 220	1	KDL, KDX, KDXP
	400098	Baffle shaft for 240	1	KDX, KDXP
53	N000034	Lock nut M18	2	KDL, KDX, KDXP
54	400100	Big baffle	N	KDL, KDX
55	400101	Combination bolt M16×40	8	KDL, KDX, KDXP
56	OS000009	Oil seal	2	KDL, KDX, KDXP
57	400103	Bearing housing	2	KDL, KDX, KDXP
58	410000	Main roller for 180	1	KDX, KDXP
	400104	Main roller for 200	1	KDX, KDXP
	400105	Main roller for 220	1	KDX, KDXP
	400106	Main roller for 240	1	KDX, KDXP
59	B000039	Bolt (10.9Level)	N	KDL, KDX, KDXP
60	400108	Hammer (14 mm Hole)	N	KDL, KDX, KDXP
61	400109	Lubrication hose	1	KDL, KDX
62	400110	Small baffle	N	KDL, KDX
63	400111	Adjust plate (left)	1	KDL, KDX, KDXP
64	B000085	Bolt M12×35	4	KDL, KDS, KM, KMHP, KDX, KDXP, KS
65	OS000010	Oil seal	1	KDL, KDX, KDXP
66	000029	Instructions box	1	Optional
67	W000024	Spring washer 6	3	Optional
68	B000143	Cross recessed pan head screws M6×16	3	Optional
69	W000025	Washer 6	3	Optional